JOURNAL OF SCIENCE OF THE MILITARY ACADEMY OF LAND FORCES

Volume 49 Number 3 (185) 2017 ISSN 1731-8157

DOI:

# ANALYSIS OF TECHNICAL REQUIREMENTS RELATED TO NEW MILITARY VEHICLES IN THE SCOPE OF TRANSPORTABILITY

**Jerzy GRZESIAK[*], Jarosław KOŃCZAK[*], Marcin MIETEŃ[*]**

[*] *Military Institute of Armored and Automotive Technology*
*e-mail: jerzy.grzesiak@witpis.eu*
*e-mail: jaroslaw.konczak@witpis.eu*
*e-mail: marcin.mieten@witpis.eu*

Received on 1st April ; accepted after revision October 2016



***Abstract:***

*In the present paper, the authors have analyzed the technical requirements for military vehicles acquired by way of purchase or research and development works on road, air and rail transportability. The issue of defining technical requirements has been addressed, since they are crucial elements of qualification tests. Transportability requirements verify a vehicle's suitability for various types of transport, its adaptation to loading and the strength of its brackets. The authors have reviewed the normative documents on the transportability of military vehicles, based on which the analysis was carried out in the context of current technical requirements. The article also deals with issues related to vehicle's transportability examinations. This type of testing is carried out at the Armored Combat Vehicle Laboratory at the Military Institute of Armored and Automotive Technology in Sulejówek. The authors have also discussed the possibilities of the application of reverse engineering in transportability examinations.*

***Keywords:***

*vehicles, technical requirements, transportability*

## INTRODUCTION

In the era of modernization and introduction of new vehicles into the army one of the most important features is their transportability. The contemporary theatre of operation requires the efficient movement of troops both by land and by air transport.

New wheeled and tracked vehicles have to meet a number of transportability requirements, ranging from transport hitches to unit pressures.

Frequently, tactical-technical requirements are mutually exclusive or unrealistic. Manufacturers often try to circumvent these provisions by transporting a vehicle incomplete or in two parts.

## 1. TECHNICAL REQUIREMENTS FOR VEHICLES IN AIR TRANSPORT

The requirements for vehicles in terms of air transportability can be divided into four groups:

- fixing a vehicle in the airplane cargo bay;
- dimensions and linear and angular dimensions of a vehicle;
- mass quantities;
- resistance to low pressure in the aircraft cargo bay and the aircraft cargo bay depressurization.

All the groups of requirements outlined above have a substantial impact on the vehicle structure and should be taken into account at the initial phase of works focused on the vehicle construction, including the parameters of the specific types of aircraft, which the vehicle is to be transported by.

### 1.1. Requirements for securing vehicles in the cargo bay

Among the NATO Member States, the United States Air Force plays undoubtedly the most predominant role. In addition, other NATO armed forces use the US production equipment regarding the category of medium and heavy aircrafts. The C130 Hercules and the C17 Globmaster are the most common ones. To be able to transport military equipment on USAF aircrafts, it must undergo the certification procedure as evidence of compliance with the Air Transportability Loading Agency (ATTLA) provisions [2]. The requirements for securing vehicles in air transport are also contained in the STANAG 3400 [15] NATO Standardization Agreement, which for understandable reasons is in conformity with ATTLA.

The ATTLA regulations require fixing the load so that it would be able to carry the following accelerations [2]:

- 3 g in the forward direction;
- 1.5 g in the transverse direction and backwards;
- 2 g in the upward vertical direction;
- 4.5 g in the downward vertical direction.

Standardized lashings in the form of ropes, belts or chains provided with the appropriate fittings and tensioning system are used in order to secure vehicles properly during air transport. There are applied lashings with the strength:

- 5000 lbs (2225 daN);
- 10000 lbs (4450 daN);

– 25000 lbs (11125 daN).

Transport aircraft floors are equipped with numerous hitches to ensure the secure fixing of the cargo. Depending on the type of aircraft and their locations they have different strength. The fittings on the airplane have standardized strength equivalent to the lashings used. Their layout in cargo bays of various versions of the C 130 Hercules aircraft and their actual appearance are shown in Figures 1 and 2.

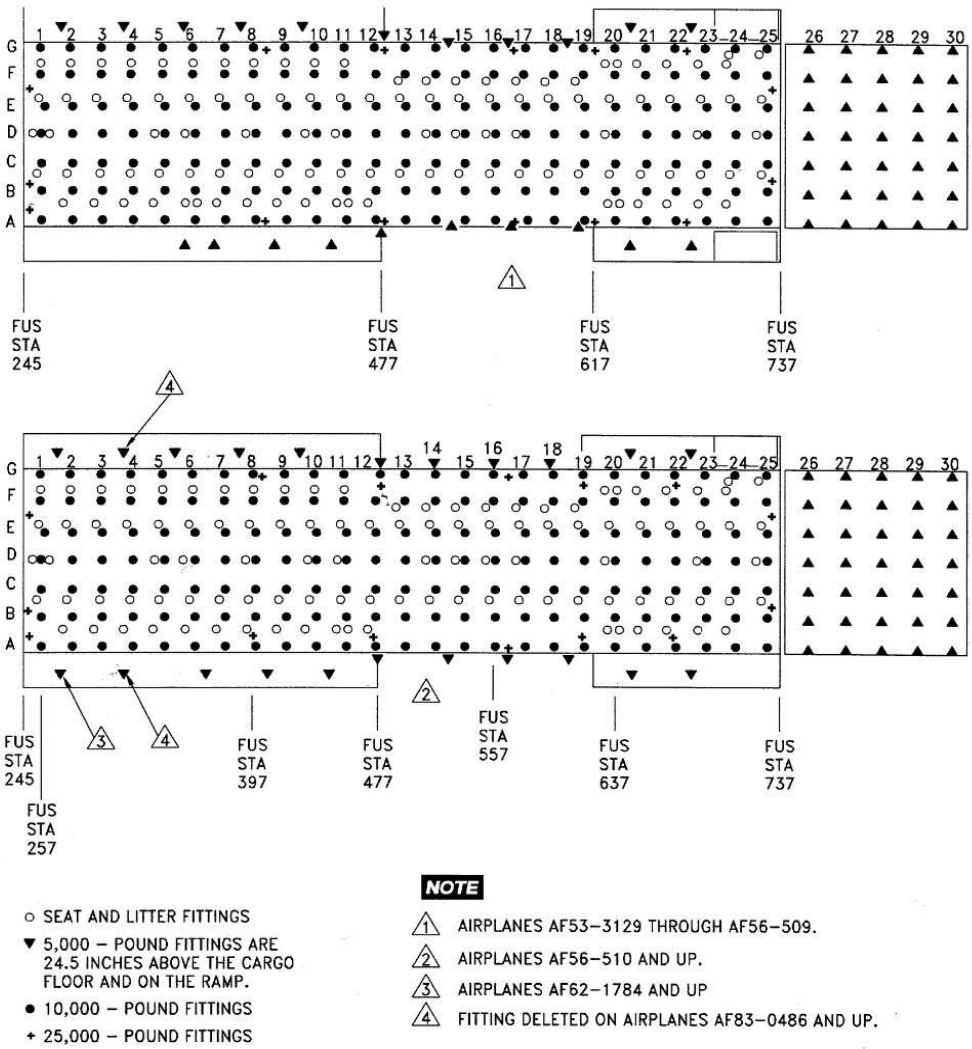


**Fig. 1.** The layout of different mounting points with the strength of 5000, 10,000 and 25000 pounds in C130E cargo bay

*Source: [18]*

With the limited strength of both the fittings on the aircraft cargo bay floor and the lashings, a vehicle must be equipped with the appropriate number of transport hitches attached to the vehicle load bearing structure. Therefore, manufacturers often agree on ATTLA requirements at the design stage.

**Fig. 2.** View of fittings with the load capacity of 10000 ft in the C130E cargo bay

*Source: Own study*

The ATTLA requirements refer to the securing of vehicles and cargo on a transport airplane. The consequence of these requirements is the quantity and distribution of the transport fittings attached to a vehicle. On the other hand, the dimensional and strength requirements for the vehicle transport hitches should correspond to those included in the STANAG 4062 Standardization Agreement [17]. The above-mentioned STANAG is in accordance with the American standard MIL-STD 209 K [9]. Under these regulations, the vehicle fittings must be able to carry loads resulting from the following accelerations:

- in the longitudinal direction - 4 g;
- in the transverse direction - 1.5 g,
- in the downward vertical direction - 2 g.

In fact, the strength of the towing devices must be greater due to the factor of safety equal to 1.5. With control loads increased by the safety factor, no cracks or deformation of the material can occur.

### 1.2. Requirements for the dimensions and linear and angular dimensions of the vehicle

The requirements for the vehicle dimensions follow from:

- aircraft cargo space allowances;
- the geometry and the width of the loading ramp;
- dimensions and geometry of the loading hatch.

As already mentioned, at the initial phase of the project, the account should also be taken of all restrictions imposed on the size of the aircraft cargo bay as well as the loading and flight procedures for a given type of aircraft intended to transport a vehicle. For example, Figure 3 shows the dimensions of the C130E Hercules cargo hold.

One of the dimensional limitations to a vehicle is the need to ensure a safety aisle between the front and the rear sections of the cargo bay (Figures 4÷5).

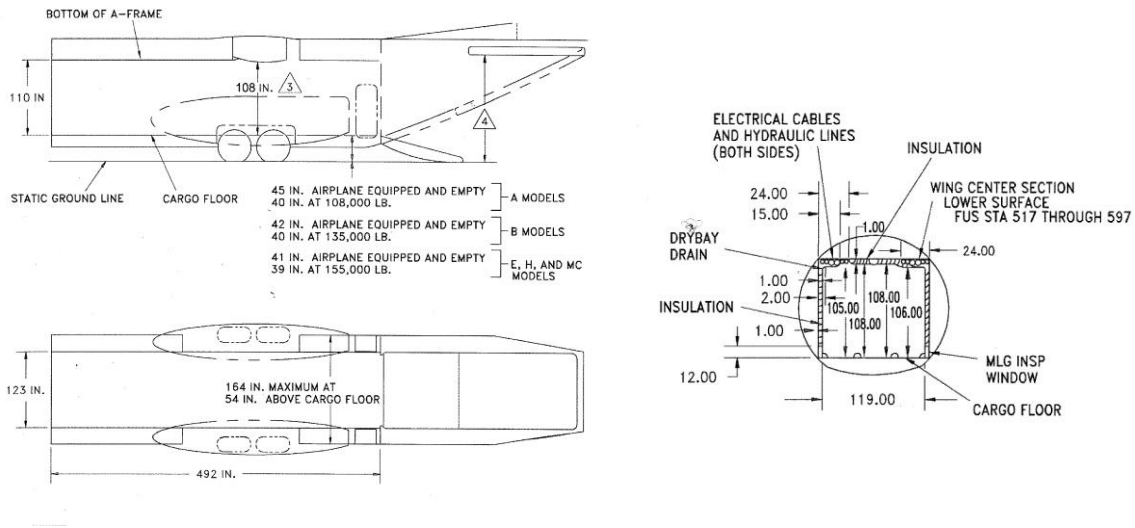


**Fig.3** View of the dimensions of the C130 E Hercules

*Source: [18]*

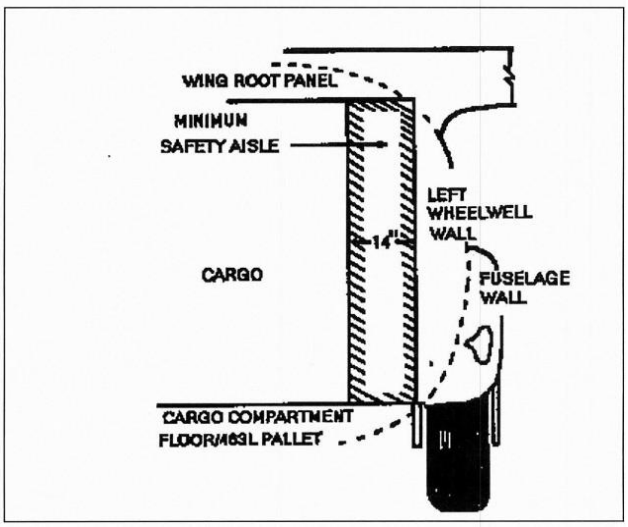


**Fig. 4.** Minimal safety aisle to be observed during transport of goods and people

*Source: [1]*

The tilt angle of the loading ramp, the width of the ramp and the dimensions of the paths along which the vehicles are to be rolled are of significant importance for boarding a vehicle. Only the marked elements of the gangway and aircraft cargo bay have the necessary strength to carry the loads linked to the vehicle weight.

The tilt angle of the loading ramp is the parameter limiting the overall dimensions of a vehicle and its capability of entering the airplane cargo bay.

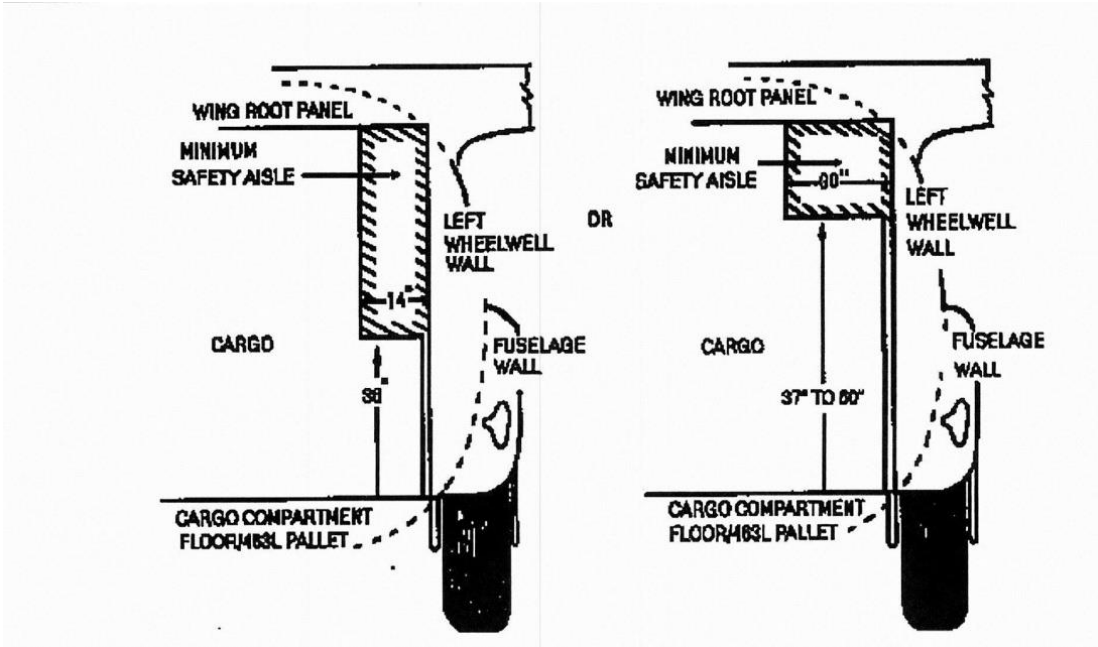


**Fig. 5.** Minimal safety aisle to be observed during transport of goods (depending on the cargo height)

*Source: [1]*

The approach and departure angles and the ramp angle must be higher than the tilt angle of the loading ramp so as to make a vehicle capable to board the aircraft (Figures 6 ÷ 7). For reasons of the safety of loading, the appropriate aisles shall be maintained as specified in the cargo-loading manual.

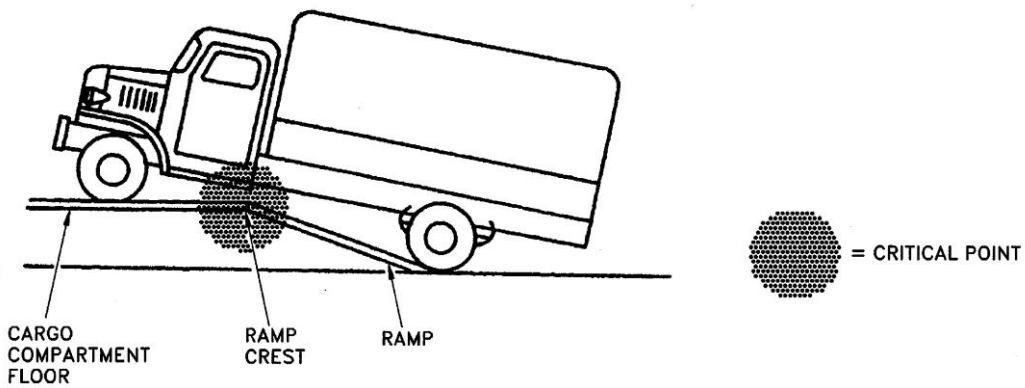


**Fig. 6.** Potential critical situation when the vehicle is loaded into the cargo bay due to too small ramp angle

*Source: [18]*

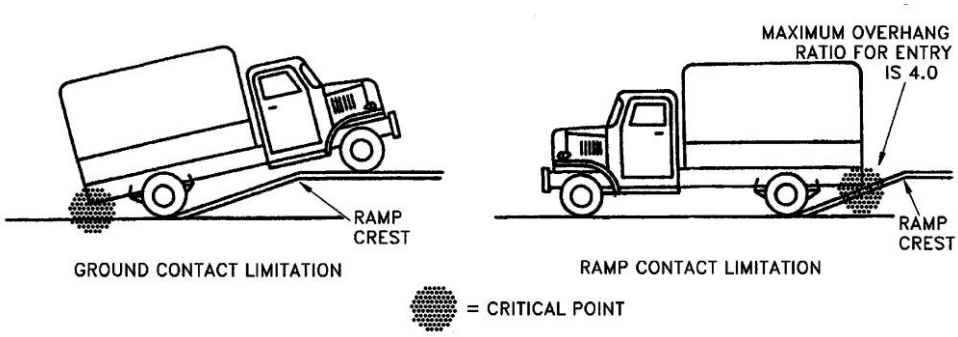


**Fig. 7.** Potential critical situation when the vehicle is loaded into the cargo bay due to too small approach and departure angles

*Source: [18]*

In addition, the maximum vehicle height can be limited by the vehicle's front or rear overhang. This also depends, of course, on the shape of the vehicle's body-shell. This is illustrated in Figure 8.

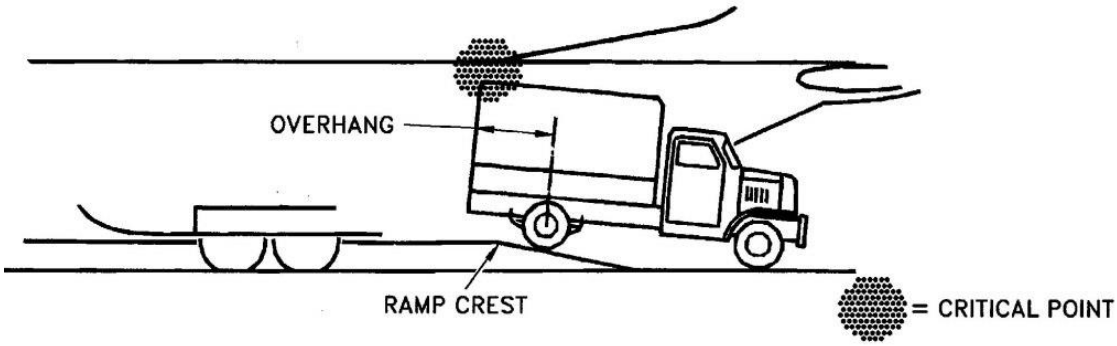


**Fig. 8.** Potential critical situation when the vehicle is loaded into the cargo bay due to too large rear overhang

*Source: [18]*

## 1.3. Weight requirements

It is obvious that the vehicle weight must not exceed the maximum lifting capacity of the aircraft. At the same time, it should be borne in mind that with the increase in the cargo weight the range of the airplane significantly decreases. Therefore, it is ineffective to transport vehicles by airplanes, whose lifting capacity is close to the vehicle's transport weight. Apart from the vehicle transport mass, the following parameters should be taken into account:

- the allowable vehicle axle load;
- allowable unit pressures (under a wheel);
- the vehicle wheelbase.

The allowable vehicle axle load on the cargo bay floor as well as the unit pressures depend on the compliance of the vehicle wheelbase with the spacing and width of the loading paths. The permissible load on the cargo floor between the paths is significant-

ly lower. Also, the aircraft loading allowance during flight depends on the cargo arrangement.

In accordance with the MIL-STD 209 K and STANAG 4062 requirements a vehicle should be equipped with a plate containing the following information:

- the center of mass (unladen);
- the location and strength of each of the transport hitches;
- the location of alternative hitches or vehicle components that can be used to mount on a railway platform;
- concerning special procedures applied in the transport of a vehicle;
- restrictions on transportability, e.g. a lack of lifting capability by a lifting equipment.

### 1.4. Requirements for the resistance of vehicle systems to reduced pressure in the aircraft cargo bay and the depressurization of the aircraft cargo bay as well as the gravity load resulting from flight conditions

The systems and units of vehicles should meet the following requirements:

- batteries should be leak proof (protected against leaks), well secured and insulated (protected against short circuits due to accelerations or tilts);
- fuel tanks and systems should be closed and protected against leaks resulting from accelerations or tilts;
- all tanks should be equipped with air vents allowing the pressure to be equalized during the climb and landing phases;
- tanks containing liquids susceptible to foaming during pressure changes should be protected by siphon circuits with expansion tanks;
- all tanks should be certified for implosion resistance due to an increase in external pressure of 55 kPa in 0.5 second, which may occur during the emergency approach landing.

## 2. TECHNICAL REQUIREMENTS FOR VEHICLES IN RAILWAY TRANSPORT

Technical requirements for vehicles transported by rail can be divided into the following two groups:

- dimensional requirements relating to the applicable railway loading gauge;
- structural requirements concerning nodes for mounting vehicles to the transport platform.

As regards the first set of requirements for railway gauges, according to the Regulation of the Minister of Infrastructure of 12 October 2005 on general technical conditions for the operation of railway vehicles [13], the outline of each railway vehicle should meet the requirements concerning the static gauge set out in PN-70 / 02056 [9]. It should be noted that the gauge of rolling stock is closely related to the railway gauge of a structure, which is defined in PN-69 / K-02057 [11] “Structure gauge”, i.e. together with the existing railway infrastructure.

The Instruction on the Transport of Special Consignments IR 10 PLK (Polish Railway Lines) applies to the transport of military equipment on railway routes in Poland [12]. According to this instruction, the international cargo gauge RIV is applicable for international transport, while the railway cargo gauge for national shipments. These gauges are part of, and in principle overlap with “A” and “B” type gauges according to PN-70 / K-02056, which are obligatory for the Polish Railway Lines according to the Regulation of the Minister of Infrastructure.

The Polish Railway Lines developed Appendix I to the instruction entitled “Catalog of Military Vehicles and Equipment Gauges – Sketchbook” [6] covering a list of basic military equipment, including technical requirements for 1435 mm rail transport. The Catalog contains transverse projections of military equipment against the reference of the gauge profile with critical points specified.

Checking the dimensions of the front projections of the vehicle cross-section gives the answer to whether or not the dimensions of the vehicle exceed the dimensions of the reference line of the cargo gauge, and if they do – to what extent. The static gauge applies to the quasi-static carriage movement on a straight-line track. On the other hand, it does not answer the question whether the vehicle being transported can travel freely on national or international routes.

Traffic restrictions may be related to the gauge reduction resulting from:

- the curve movement - the longitudinal axis of the carriage is displaced in relation to the track axis (in the horizontal plane). In the part of the carriage between the axles, the shift occurs towards the inner side of the curve, while in the part of the carriage outside the axle (the front and rear end of the carriage) - outside of the curve (Figure 9).

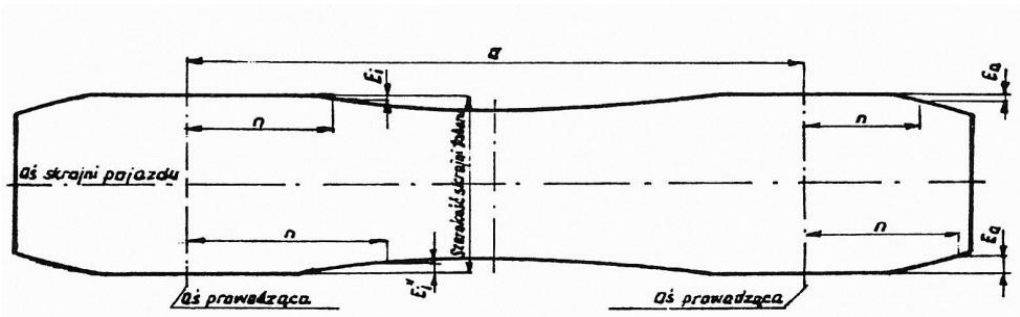


**Fig. 9.** Reduction of the gauge width in individual cross sections of a railway carriage

*Source: [12]*

The size of the displacement depends on:

- the curve radius;
- the wheelbase;
- the longitudinal position of the cargo (vehicle) on the carriage platform;
- asymmetry of placing with respect to the longitudinal axle;
- the track gradient on the curve;

- transverse carriage displacement resulting from the increased track gauge on curves;
- transverse carriage and cargo (vehicles) sways.

In addition, the gauge may be lowered due to vertical movements of the carriage and cargo. Restrictions resulting from gauge narrowing do not imply that transport is impossible. In this case, the railway service determines special transport conditions (limited speed, deactivation of an electric traction or temporary shutdown of a railway line from normal operation). In principle, each transport of a vehicle must be agreed with a carrier who decides on the choice of rolling stock. The carrier possesses information on the construction gauge of carriages, which allows for the proper selection of rolling stock and appropriate positioning of the vehicle on the platform.

The requirements for fittings of vehicles, just as it is in the event of air transport, are contained in STANAG 4062.

## 3. TECHNICAL REQUIREMENTS FOR VEHICLES IN ROAD TRANSPORT

Military vehicles as special-purpose vehicles are subject to a specific specified transport method. Oftentimes, this is non-standard transport that requires road transport permits and a special way of organizing and marking the columns, including piloting by other vehicles. In the case of hostilities, the transit time and its high traction capacity (mobility) [3] are important when organizing transport tasks. Accordingly, proper selection of technical parameters of equipment, already at the stage of ordering, requires taking account of the parameters of the possessed tank and vehicle equipment included in the transport structure of the Armed Forces of the Republic of Poland.

### 3.1. Weight restrictions

Restrictions related to the weight criterion of a vehicle or a combination of vehicles refer essentially to two technical parameters, that is to its:

- gross vehicle weight rating;
- gross axle weight.

The gross vehicle mass (GVM) is the maximum weight of a vehicle loaded with people and cargo, that was approved for transport on public roads. Its values are set out in the Regulation of the Minister of Infrastructure of 31 December 2002 on the technical conditions of vehicles and the scope of their necessary equipment [18], and the following values must not be exceeded:

a) a component vehicle or a combination of vehicles;

- a two-axle trailer – 18 t;
- a three-axle trailer – 24 t.

b) a combination of vehicles with five or six axles:

- a two-axle vehicle and a three-axle trailer – 40 t;
- a three-axle vehicle and a two-axle trailer – 40 t.

c) an articulated vehicle with five or six axles:

– a two-axle tractor and a three-axle semi-trailer – 40 t;

– a three-axle tractor and a three-axle semi-trailer – 40 t;

– a three-axle tractor and a three-axle semi-trailer transporting 20-foot ISO container in combined transport – 44 t.

d) a combination of vehicles with four axles, consisting of a two-axle trailer - 36 t.

e) a three-axle vehicle - 25 t or 26 t if the drive axle is fitted with twin tires and the maximum axle load of each axle does not exceed 9.5 t,

f) an articulated vehicle with four axles consisting of a two-axle tractor and a two-axle semi-trailer if the distance between the axles of the semi-trailer:

– is at least 1.3 m but not more than 1.8 m - 36 t,

– is greater than 1.8 m plus 2t of tolerance if the drive axle is fitted with twin tires and pneumatic or equivalent suspension.

g) two-axle vehicle - 18 t.

h) four-axle motor vehicle with two steering axles - 32 t if the drive axle is fitted with twin tires and pneumatic or equivalent suspension or if each of the drive axles is fitted with twin tires and the maximum axle pressure of each axle does not exceed 9, 5 t.

What is more, a vehicle or a combination of vehicles moving on public roads is subject to restrictions on the maximum allowable axle load. This parameter determines the strength of the chassis (and hence the safety of the combat or transport task to be carried out) and affects even the strength of the road surface on which a vehicle moves. In particular, this coefficient is significant for vehicles of N2 and N3 categories, where the appropriate distribution of the transported cargo affects the unit pressures on particular axles.


**Fig. 10.** Example of transportation of small vehicles on a high capacity vehicle - transport of 2 KPZ-170 type field kitchens

*Source: Own study*

At this point a single and double axes are to be defined, which are determined by the mutual distance between them. On the basis of the Regulation [18], if the distance between the two axles is less than 1,8 m, there are not two separate axles but one double axle. According to the Act on Road Traffic [19], 25% of the total weight (or a component) of vehicles first registered after 31 March 1998 must fall on the drive axles. In addition, the permissible pressure on:

- a drive axle of a vehicle of N category cannot be greater than 11.5 t;
- a single non-drive axis cannot be greater than 10 t.

In the case of the dual drive axle, the allowable pressure determines the mutual distance between the axles. If the distance between dual axles of the drive axle is:

- less than 1 m, the permissible pressure on the double axle is 11.5 t.
- between 1 ÷ 1.3 m, the permissible pressure on the double axle is 16 t.

If the drive axle is fitted with twin tires and pneumatic or equivalent suspension, and if each of the drive axles is fitted with twin tires and their maximum pressure does not exceed 9.5 t, then with the axle distance of 1.3 ÷ 1.8 M, the axle load may be of 18 or 19 t.

**Fig. 11.** The initial phase of loading a damaged car onto a high capacity vehicle using the Multilift Mk IV self-loading system

*Source: Own study*

**Fig. 12.** The final stage of loading a car onto a high capacity vehicle using the Multilift Mk IV self-loading system

*Source: Own study*

## 3.2. Restrictions related to external dimensions

In accordance with the conditions set out in the Regulation of the Minister of Infrastructure of 31 December 2002 on the technical conditions of vehicles and the scope of their necessary equipment [14], vehicles are subject to restrictions on external dimensions. On the basis of the above Regulation the dimensions given in Table 1 limit the maximum allowable vehicle length. For these vehicles, the maximum allowable width is 2.55 m (excluding articulated mirrors, lights and elastic elements made of rubber or plastics) and the height of 4 m.

**Table 1.** Maximum length of individual vehicles as defined in the Regulation [18]

| Vehicle type | The maximum length |
|---|---|
| Vehicle, except bus | 12 m |
| Trailer, except semi-trailer | 12 m |
| Articulated vehicle | 16,50 m |
| Combination of a motor vehicle and a trailer | 18,75 m |
| Articulated bus | 18,75 m |
| Two-axle bus | 13,50 m |
| Bus with more than two axles | 15 m |
| Combination of a bus and a trailer | 18,75 m |

| Vehicle type | The maximum length |
|---|---|
| Combination of three vehicles in which the towing vehicle is a low-speed vehicle or an agricultural tractor | 22 m |
| Motorcycle | 4 m |

*Source: The Regulation of the Minister of Infrastructure of 31 December 2002 on the technical conditions of vehicles and the scope of their necessary equipment*

The aforementioned dimensions are not applicable to:

- special vehicles and vehicles used for special purposes of the Armed Forces of the Republic of Poland, for which only requirements concerning the maximum width of no more than 4 m. are specified in the Regulation [18];
- special purpose vehicles and those used for special purposes by the Police, the Internal Security Agency, the Foreign Intelligence Agency, the Military Counterintelligence Service, the Military Intelligence Service, the Central Anticorruption Bureau, the Border Guard, the Government Protection Bureau, the fiscal inspection, the Customs Service, the Prison Service and the Fire Service, the requirements for which with regard to the maximum width of no more than 3.5 m are specified in the Regulation.

In this case, when these vehicles do not meet the requirements for civil vehicles, they must be subject to road traffic permits issuance and a specific way of organizing and marking the columns, as described in detail in normative and legislative documents [4,5,14,19].

**Fig. 13.** Scanning of the cargo bay of the Hercules C-130 aircraft

*Source: Own study*

## 4. VIRTUAL STANDS FOR TRANSPORTATION TESTS

The Military Institute of Armor Technology is in the process of developing virtual stands for transportability testing. The application of reverse engineering allows for a virtual attempt to fit a vehicle to a particular type of transport, for instance, the vehicle can be tried to the cargo bay of the Hercules C130 or the carriage's loading platform. These types of stands will enable virtual vehicle model verification at the design stage.

## CONCLUSIONS

In conclusion, detailed records that would assist designers, contractors and researchers in the process of creating, producing and verifying a vehicle should extend the requirements for transportability. Laconic provisions create problems already at the design stage when estimating dimensions and mass loads of a vehicle.

As far as air transport is concerned, the aim should be to develop the rail transport-based sketchbooks for all the Armed Forces vehicles that are adapted for transport by air. These types of documents will facilitate the process of boarding a vehicle. This document should also consider the range of aircrafts carrying vehicles.

In the case of rail transport, in order to assess whether the requirements are met for the railway gauge it is assumed that the vehicle is transported on a rail platform, 1300 mm over railhead. When developing assumption for new combat vehicles, consideration should be given to the use of special carriages (e.g. reduced platform, length, etc.) to meet the railway gauge requirements for larger vehicles, especially if this would increase their technical and tactical values.

## REFERENCES

1. AIR FORCE INSTRUCTION 11-2C-130 - C-130 Operations Configurations/Mission Planning.
2. ATTLA - Air Transportability Test Loading Activity, Tie down and Restraint, 102 An updated tutorial on tie down and restraint of cargo on USAF cargo aircraft.
3. DD/4.22.2 Przepisy o gospodarowaniu sprzętem Czołgowo-Samochodowym, IWsp SZ, Bydgoszcz, 2014.
4. DD/4.4(B) Doktryna Transportu i Ruchu Wojsk.
5. DD 4.4.4(B) Zasady Wojskowego Ruchu Drogowego, DGRSZ, Warszawa, 2015 r.
6. Katalog skrajni pojazdów i sprzętu wojskowego „Szkicownik".
7. MIL-STD-1791A: Designing for internal aerial delivery in fixed wing aircraft. (USAF) 19 November 2012.
8. MIL-STD-209K – Interface standard for lifting and tie down provisions.
9. PN-70/K-02056 – Tabor kolejowy normalnotorowy - Skrajnie Statyczne.

10. PN – EN 15273-2 „Skrajnie Pojazdów Szynowych".
11. PN – 69/K-02057 - Koleje normalnotorowe - skrajnie budowli.
12. Polskie Linie Kolejowe – Instrukcja o Przewozie Przesyłek Nadzwyczajnych- Ir 10.
13. Rozporządzenie Ministra Infrastruktury z dnia 12 października 2005 r. w sprawie ogólnych warunków technicznych eksploatacji pojazdów kolejowych.
14. Rozporządzeniu Ministra Infrastruktury z dnia 31 grudnia 2002 r. w sprawie warunków technicznych pojazdów oraz zakresu ich niezbędnego wyposażenia, Dz. U. 2003 nr 32 poz. 262.
15. STANAG 3400 - Restraint of cargo in fixed wing aircraft.
16. STANAG 3548 – Tie down fitings on air transported and air dropped equipment and fixed wing aircraft.
17. STANAG 4062 – Sling and Tie Down Facilities for Lifting and Tie Down Military Equipment for movement by Land and See.
18. TO XX1C-130A9 – Cargo loading manual.
19. Ustawa Prawo o ruchu drogowym, Dz.U. 1997 nr 98 poz. 602.

## BIOGRAPHICAL NOTE

**Jerzy GRZESIAK** – MSc. Eng., graduate of the Faculty of Automotive and Machinery Engineering of the Warsaw University of Technology, research and technical specialist at the Military Institute of Armor and Automotive Technology.

**Jarosław KOŃCZAK** – MSc. Eng., doctoral student at the Institute of Aviation in Warsaw, graduate of the Faculty of the Mechanical Engineering at the Military Academy of Technology, engineering and technical specialist at the Military Institute of Armor and Automotive Technology.

**Marcin MIETEŃ** – MSc. Eng., graduate of the Faculty of Transport of the Warsaw University of Technology, engineering and technical specialist at the Military Institute of Armor and Automotive Technology.

## HOW TO CITE THIS PAPER

**Grzesiak J., Kończak J., Mieteń M.,** (2017)., Analysis of technical requirements related to new military vehicles in the scope of transportability. *Zeszyty Naukowe Wyższa Szkoła Oficerska Wojsk Lądowych im. gen. Tadeusza Kościuszki Journal of Science of the gen. Tadeusz Kosciuszko Military Academy of Land Forces,* 49 (3), p. 90-105, http://dx.doi.org/10.5604/ 17318157. 1201739